Ningbo Longwell Electric Technology CO, LTD
https://www.longwellfans.com Email:sales@zjlongwell.com

LWBE-250 Series

Product Characteristic

- Impeller Material: Aluminum Alloy
- Supply Voltage: 230V,50/60Hz
- Direction of rotation: Clockwise,seen on rotor
- Mode Of Operation: S1
- Protection Class: IP44
- Insulation Class: B
- Mounting position: Horizontal or Vertical
- Operation Temperature: -25℃～+60℃
- Bearing: Maintenance-free ball bearings
- Technical features: Control input 0-10VDC/PWM
- Protection: Tech output,Locked-Rotor protection
  Reverse Polarity,Over-voltage protection,Soft Start

Technical Specifications

Model	Voltage (V)	Input Power (W)	Current (A)	Air Volume (m³/h)	Static Pressure (Pa)	Speed (RPM)	Noise [dB(A)]
LWBE3G250-092NS-22	230	145	1	1730	525	2500	74

Product Drawing (mm)

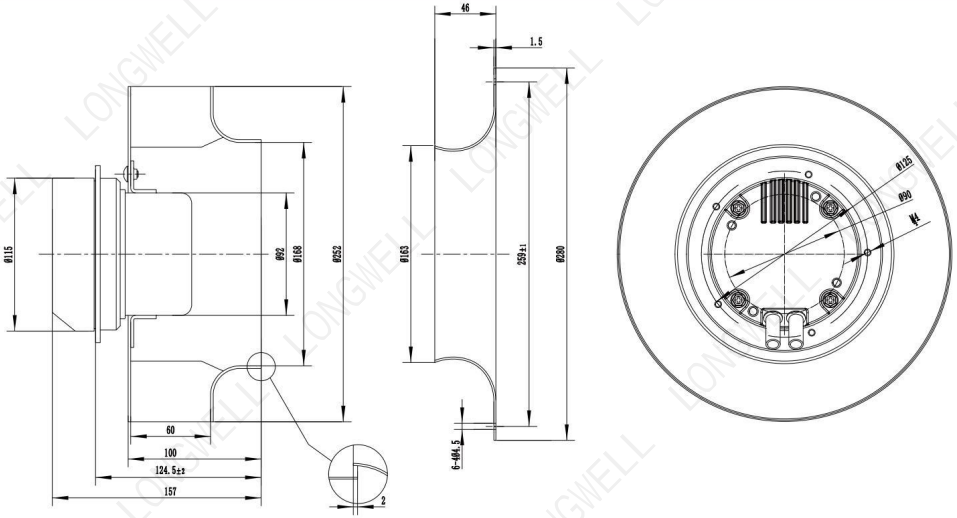
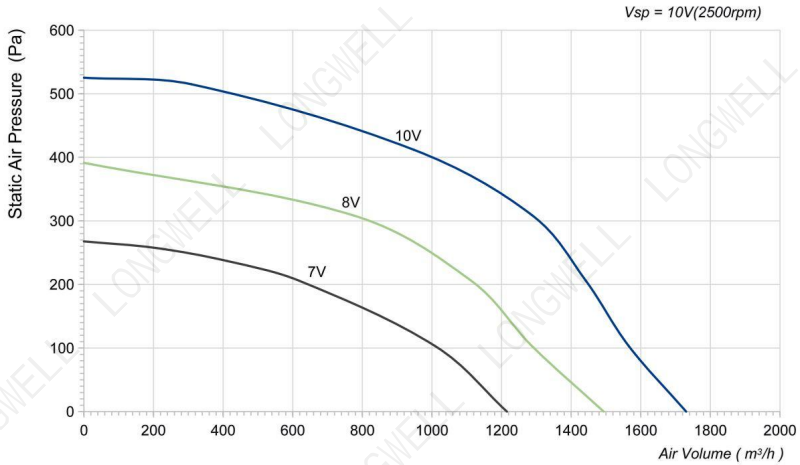
Flow Rate Curve