Ningbo Longwell Electric Technology CO, LTD
https://www.longwellfans.com Email:sales@zjlongwell.com

LWAE-630 Series

Product Characteristic

- Material: Sheet steel
- Type of protection: IP54
- Insulation class: F
- Motor type: BLEC Motor
- Operation Temperature: -25℃～+60℃
- Techniacal Feature: Control input 0-10VDC/PWM,Tech output,Locked-Rotor protection,Reverse Polarity Over-voltage protection, Soft Start Protection.

Technical Specifications

Model	Voltage (V)	Frequency (Hz)	Current (A)	Power [W(@0Pa)]	Speed (RPM)	Air Volume (m³/h)	Noise [dB(A)]
LWAE3G630TS-5MNW-01	3-380	50/60	1.3	800	1150	14935	69
LWAE3G630TT-5MNW-02	3-380	50/60	1.3	800	1150	14935	69
LWAE3G630TS-5MEW-03	3-380	50/60	1.3	800	1150	14935	69
LWAE3G630TT-5MEW-04	3-380	50/60	1.3	800	1150	14935	69
LWAE3G630TS-5MKW-05	3-380	50/60	1.3	800	1150	14935	69
LWAE3G630TT-5MKW-06	3-380	50/60	1.3	800	1150	14935	69

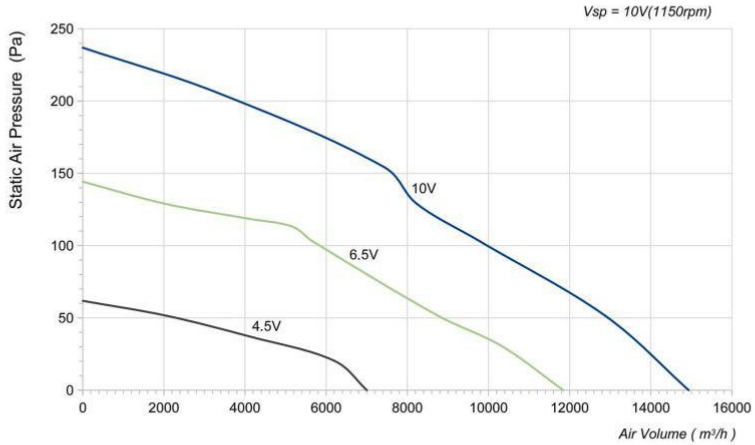

LWAE3G630TS-5MNW-01(Suction) LWAE3G630TT-5MNW-02(Blowing)

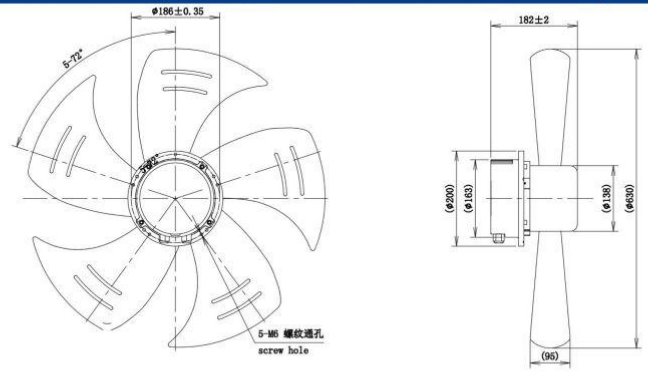

LWAE3G630TS-5MEW-03(Suction) LWAE3G630TT-5MEW-04(Blowing)

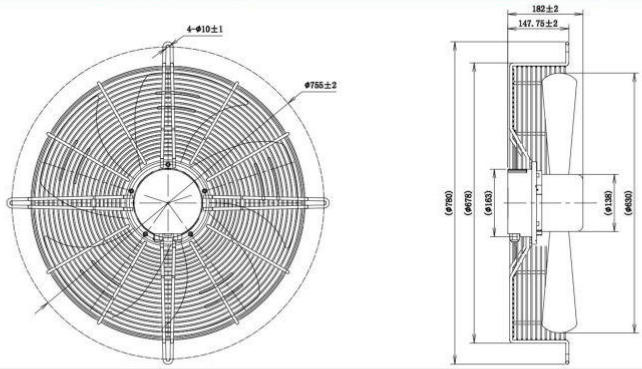
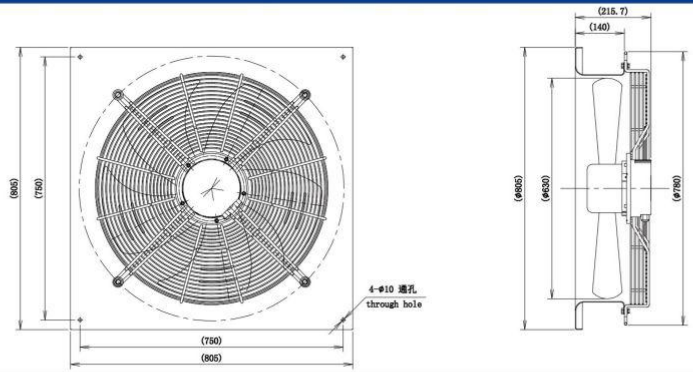
LWAE3G630TS-5MKW-05(Suction) LWAE3G630TT-5MKW-06(Blowing)