Ningbo Longwell Electric Technology CO, LTD
https://www.longwellfans.com Email:sales@zjlongwell.com

LWAA-250 Series

Product Characteristic

- Blades : Cold rolled steel
- Number of blades: 7
- Mode of operation: S1
- Type of protection: IP44
- Insulation class: F
- Operation Temperature: -30℃~+60℃

CE BSCI ISO EAC UL LVD

Technical Specifications

Model	Voltage (V)	Frequency (Hz)	Current (A)	Power (W)	Speed (RPM)	Air Volume (m³/h)	Capacitor (uF)	Noise [dB(A)]	Curve
LWAA4E250B-7MKB-18	220/230	50	0.25	50	1400	979	2	53	①
LWAA4E250B-7MKB-19	220/230	60	0.27	60	1650	1133	2	54	②

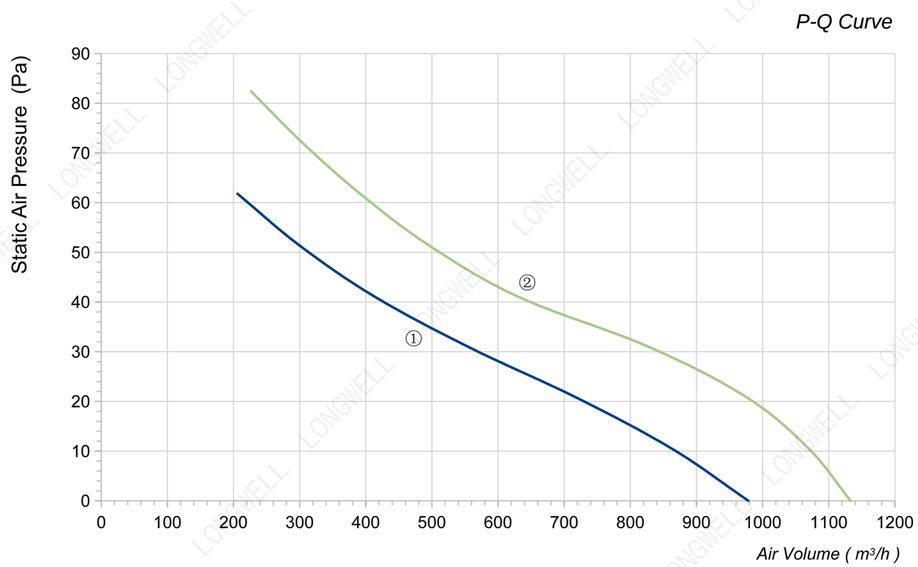
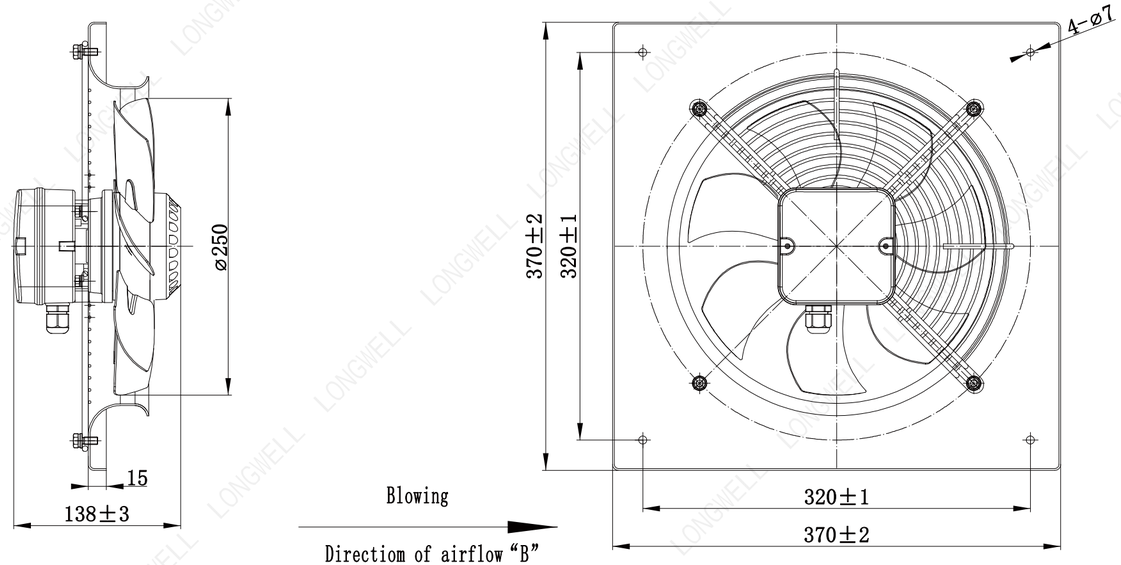
Product Drawing (mm)